BlackVue Dashcam Installation Guide

BlackVue Dashcam Installation Guide

? Before You Begin

- **Choose installation locations carefully:**
  - **Front camera**: Behind the rearview mirror.
  - **Rear camera**: At the top center of the rear windshield.
- **Clean the windshield**: Remove any dust, oil, or moisture before sticking the cameras.
- **Peel off the protective film** from both front and rear cameras to prevent overheating.
- **Do not install** the cameras where they might block the driver’s view.



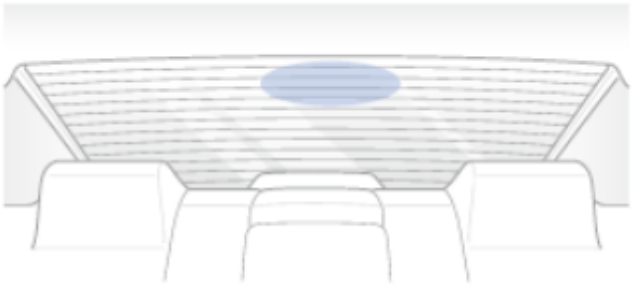

**Note for 1CH model users:* The rear camera is optional.

> **Note: GPS on heat-reflective windshields**
> * Heat-reflective (metal-coated) windshields or metallic tint film may weaken GPS reception.

> * Mount the front camera in or near the radio-permeable area of the windshield, usually near the rearview mirror (check your vehicle manual). Keep the lens clear of the dot pattern.
>
> **See GPS Troubleshooting →**

Step-by-Step Installation

Step1. Insert the microSD Card

- Turn off the vehicle engine.
- Open the microSD card slot cover on the front camera.
- Gently insert the card until it clicks into place and close the cover.

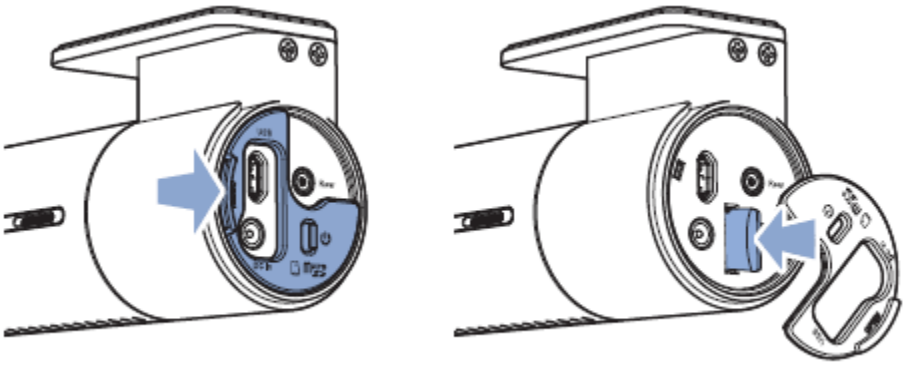

Step2. Mount the Front Camera

- Remove the double-sided tape.

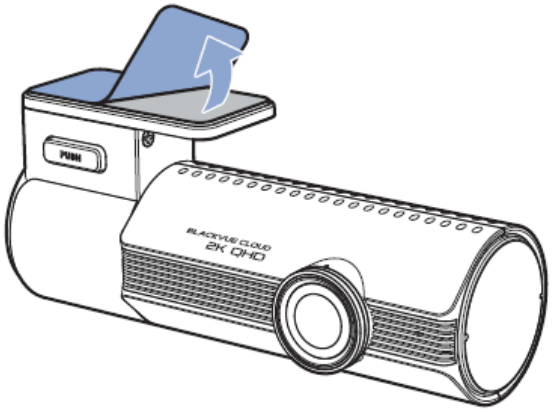

- Attach the front camera to the windshield, behind the rearview mirror.

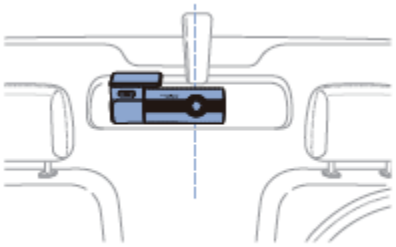

- Adjust the lens angle by rotating the camera body.
  Tips: *Tilt the lens slightly downward (~10°) for a 6:4 road-to-sky ratio.*

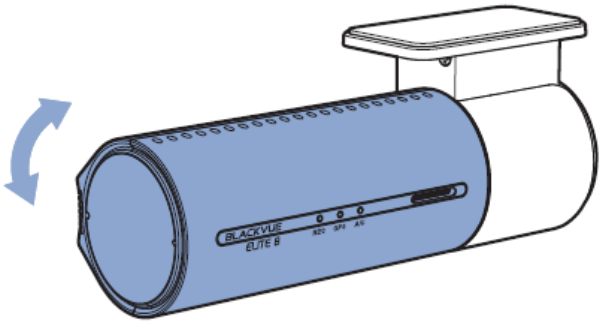

Step3. Mount the Rear Camera (if applicable)

- Peel off the tape film and stick the rear camera to the rear windshield.
- Rotate the camera body to adjust the viewing angle.

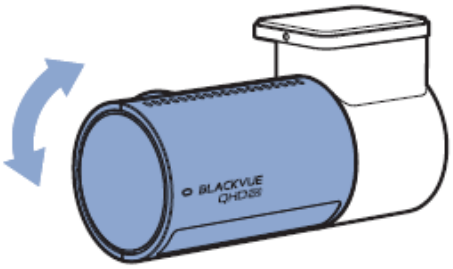

Step4. Connect the Front and Rear Cameras

- Use the provided rear camera cable:

- Plug one end into the **‘Rear’** port of the front camera.
- Plug the other into the **‘V out’** port of the rear camera.

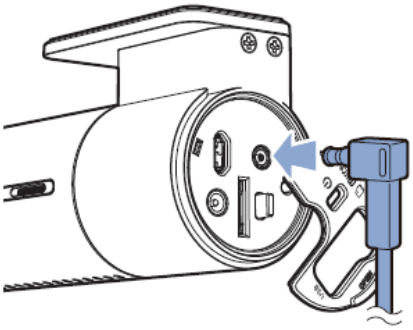

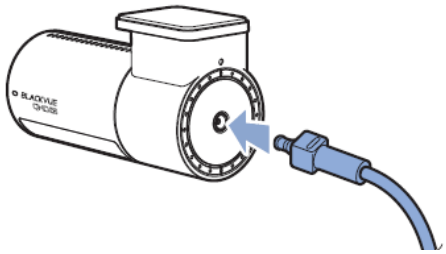

Step5. Hide the Rear Camera Cable

- Use the pry tool to gently lift window moldings or rubber seals.
- Tuck the cable neatly along the edges for a clean look.

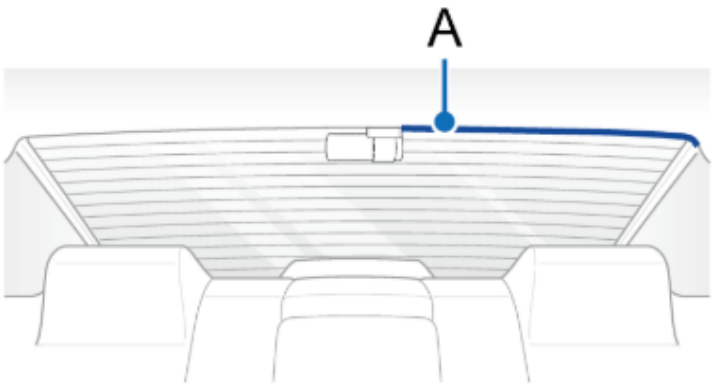

A): Rear camera cable

Powering Your Dashcam

You can power your BlackVue dashcam in three main ways. Choose the option that matches your vehicle's compatibility.

Option A. Using the USB-C PD 3.0 Power Cable

Use this method if your vehicle has a **Type-C port that supports PD 3.0** (Power Delivery 3.0).

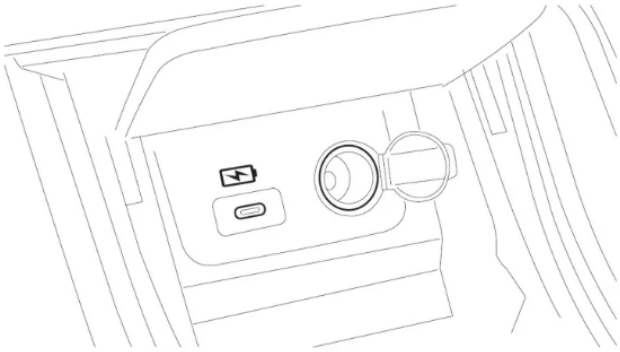

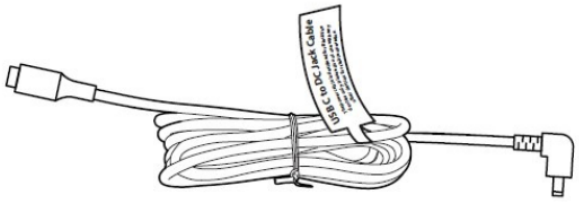

1. **Locate the Type-C Port in Your Vehicle**
    - Usually located near the **passenger seat** (varies by vehicle).
    - Look for a **lightning bolt symbol** to confirm PD 3.0 support.

2. **Connect the Cable to the Dashcam**
    - Plug the **USB-C PD 3.0 Power Cable** into the **vehicle's Type-C port**, and the other end into the **front camera's DC-in port**.

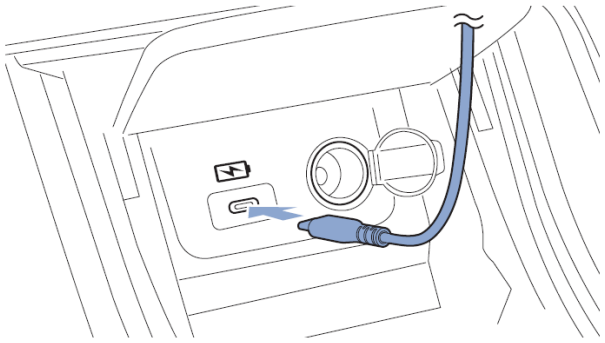

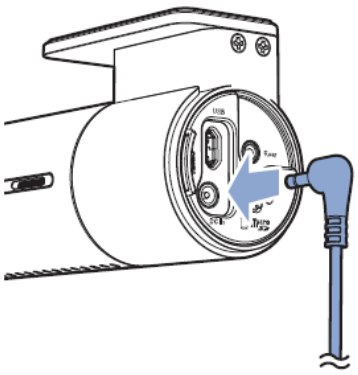

3. Hide the Cable

- Use the **pry tool** to lift rubber seals and tuck in the cable neatly along window trim.

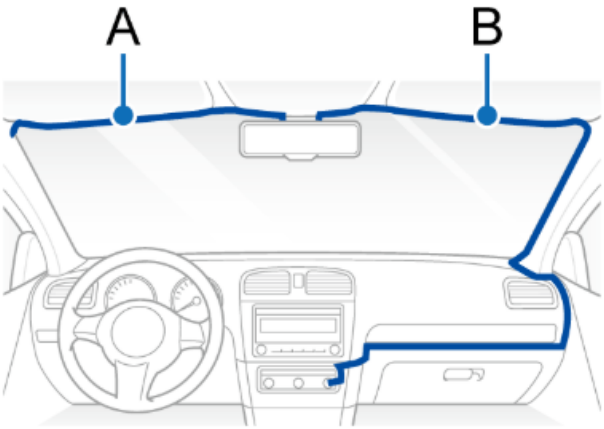

A) Rear camera cable / B) USB-C PD 3.0 Power Cable

4. Start the Engine

- The dashcam will **automatically power on and start recording**.

?Caution

Parking Mode is **not supported** with USB-C power.
For full features, use a hardwiring kit or battery pack.

Option B. Using the Dual USB-C Car Charger (Type-C Adapter)

Use this method if:

- Your vehicle **doesn't have** a Type-C port, or
- The Type-C port **doesn't support PD 3.0.**

1. **Plug the Dual USB-C Car Charger into the 12V Outlet**
    - Insert the **Dual USB-C car charger** into your vehicle's **cigarette lighter socket**.
    - Connect the **USB-C power cable** to the USB-C port labeled **"Dashcam"** on the adapter.

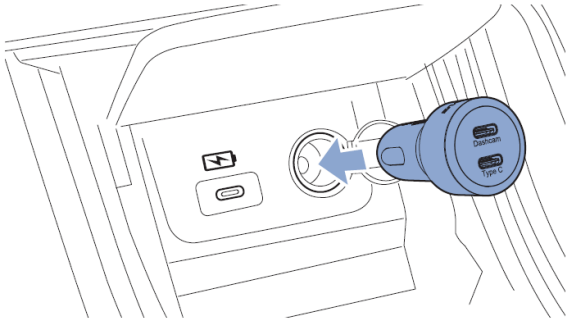

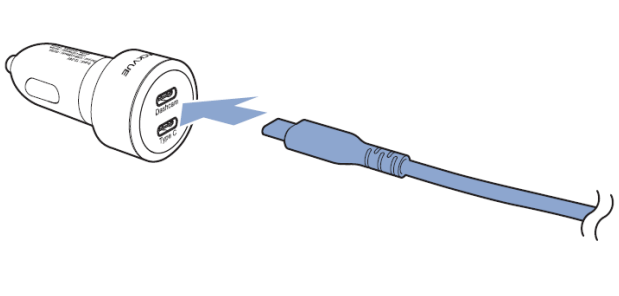

2. **Connect the USB-C PD 3.0 Power Cable**
    - Connect the cable from the adapter to the **front camera's DC-in port**.

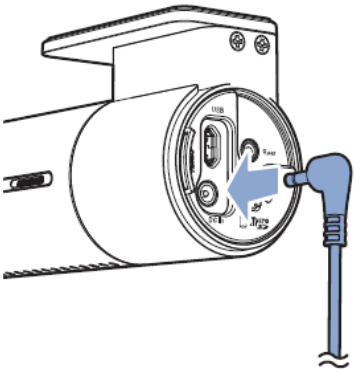

3. **Hide the Cable**

   - Use the **pry tool** to lift rubber seals and tuck in the cable neatly along window trim.

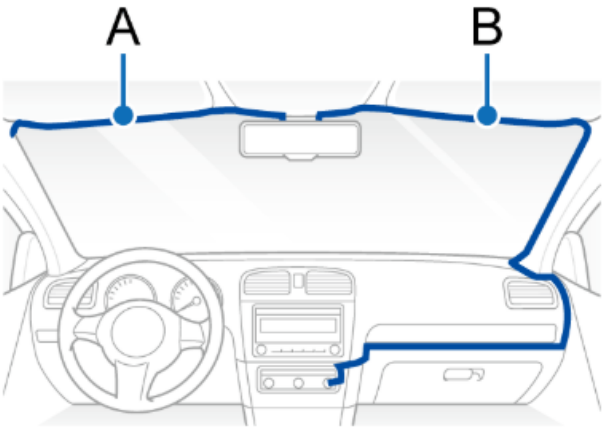

A) Rear camera cable / B) USB-C PD 3.0 Power Cable

4. **Start the Engine**

   - The camera will power on and begin recording automatically.

?Caution

This method also does **not support Parking Mode**.
To record in parking mode while the engine is off, please connect the Hardwiring **Power Cable**

(Sold separately) or install a **Power Magic Battery Pack (sold separately)**.

Option C: Using the Hardwiring Power Cable

1. Locate your vehicle's fuse box (check your car manual if unsure).
2. Remove the fuse box cover and identify:
3. A fuse that powers **on with the engine** (e.g. audio, cigarette lighter) – connect **ACC+** here.
4. A fuse that's **always powered** (e.g. hazard lights, dome light) – connect **BATT+** here.

Tips*:* For parking mode and battery protection, connect **BATT+** to the hazard light fuse.

5. Connect the **GND (ground)** wire to a metal bolt on the vehicle frame.
6. Plug the power cable into the front camera's **DC in** port. The dashcam will power on and start recording.

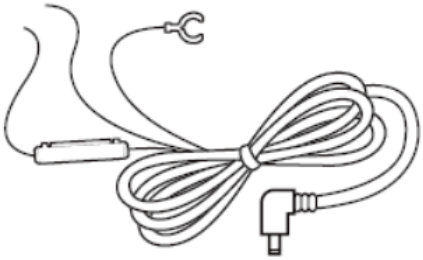



Option D: Using the Battery (B-130A)

This installation method involves using a dedicated external battery, the **Power Magic Ultra Battery (B-130A)**, to power the dashcam. It is an effective option that provides stable power to the dashcam without burdening the vehicle's main battery.

Recommended For

- **Users who need extended dashcam recording while parked**
- **Users who want to prevent battery discharge of the vehicle**

- **Users looking for a more reliable power source**

Installation Overview

The B-130A can be charged via the vehicle’s cigarette lighter socket or fuse box, and once fully charged, it supplies power independently to the dashcam.

For detailed installation steps and precautions, please visit the following link:
https://manual.blackvue.com/docs/power-magic-ultra-battery-b-130a/installation/installation-b-130a/

Tips

The first time the dashcam runs, firmware is automatically saved to the microSD card. Customize settings after that.