Connect to BlackVue Cloud – DR750X-3CH Plus series

Using a mobile Wi-Fi hotspot, BlackVue connectivity module device, or a car-embedded wireless internet connection you can connect your dashcam to the internet and take advantage of the following features in the BlackVue app and BlackVue Cloud Viewer:

Live View – Watch your dashcam's live video feed.
Push notifications – Be notified on your smartphone when something happens to your car.
GPS tracking – See in real-time where your car is and track your car's route and speed.
Two-way voice communication – Initiate voice chat from your smartphone to your dashcam.
Video backup – Backup video recordings to the Cloud or your smartphone's storage.
Video playback – Watch recorded videos stored on your dashcam or in the Cloud on your smartphone anywhere, anytime.

Connect to BlackVue Cloud (Optional)

If you don't have a mobile Wi-Fi hotspot, BlackVue connectivity module, or if you don't want to use the BlackVue Cloud service, you can skip this step.
If you have a mobile Wi-Fi hotspot (also known as a portable Wi-Fi router), BlackVue connectivity module (CM100LTE), or a car-embedded wireless internet network or a Wi-Fi network near your car, you can use the BlackVue app to connect to BlackVue Cloud and see in real-time where your car is and the dashcam's live video feed.
For more information about using the BlackVue app, please refer to the manual from **www.blackvue.com > Support > Manuals.**

1. Create an account

(i) Open the BlackVue app.
(ii) Select **Login** if you have an account, otherwise tap **Get started** to create an account. If you want

to sign up later, press **Sign up later**.

(iii) During sign up, you will receive an e-mail with a confirmation code. Enter the confirmation code to finish creating your account.

(iv) Tap **Yes** to enable push notifications (this setting can be adjusted at any time later).

(v) Once sign-up process is done, you will be automatically logged into your account.

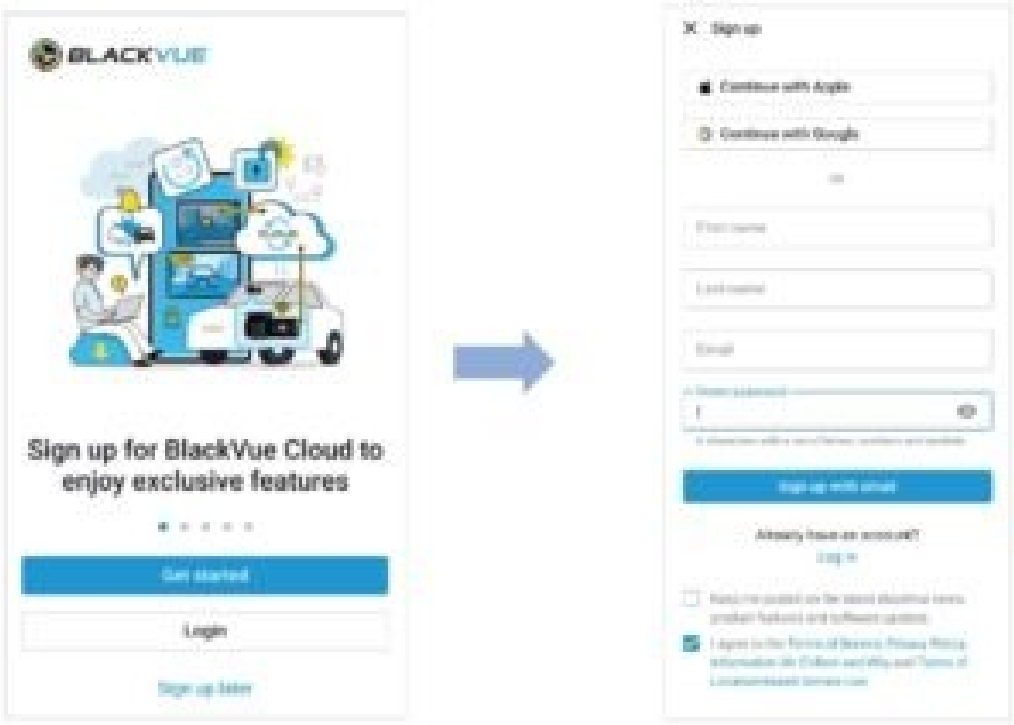

2-1. Add BlackVue dashcam to camera list via Seamless pairing

(i) Select Connect to camera in the main page.

(ii) Make sure smartphone's Bluetooth is turned on and press **+**.

(iii) Select **Seamless pairing support model**.



(iv) Choose your BlackVue dashcam from the detected camera list.

(v) Put your hand on the camera's touch/proximity sensor to complete Seamless pairing.

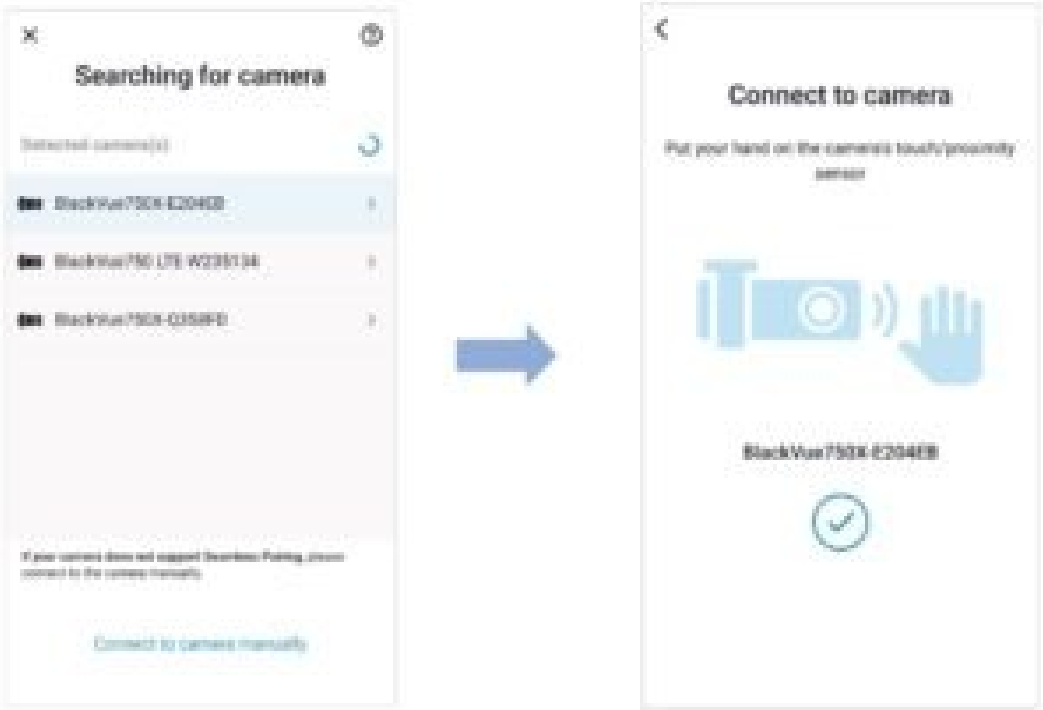

Note

- Bluetooth lets you connect your smartphone to your dashcam within a range of 10m.
- You can find your BlackVue dashcam's SSID in product label or in the packing box.

(vi) Customize your camera name and press **OK**.



(vii) BlackVue dashcam is now added to the camera list.

2-2. Register your camera manually using one of the following methods (Check connectivity details).

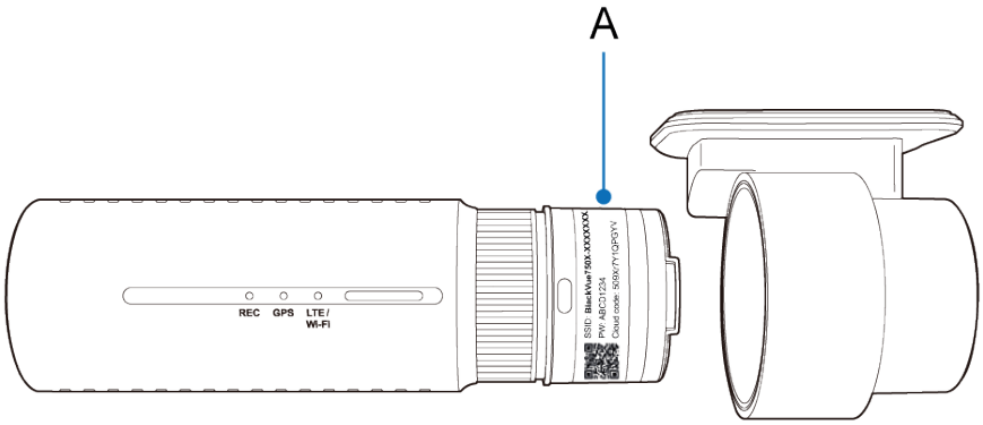

A) QR code / Cloud code / Serial number

(i) **Scan the QR code:** Scan QR Code and line up the QR Code on your smartphone screen.
(ii) **Input QR code manually**: Enter your camera's Serial number, Cloud code and press **Add camera**.

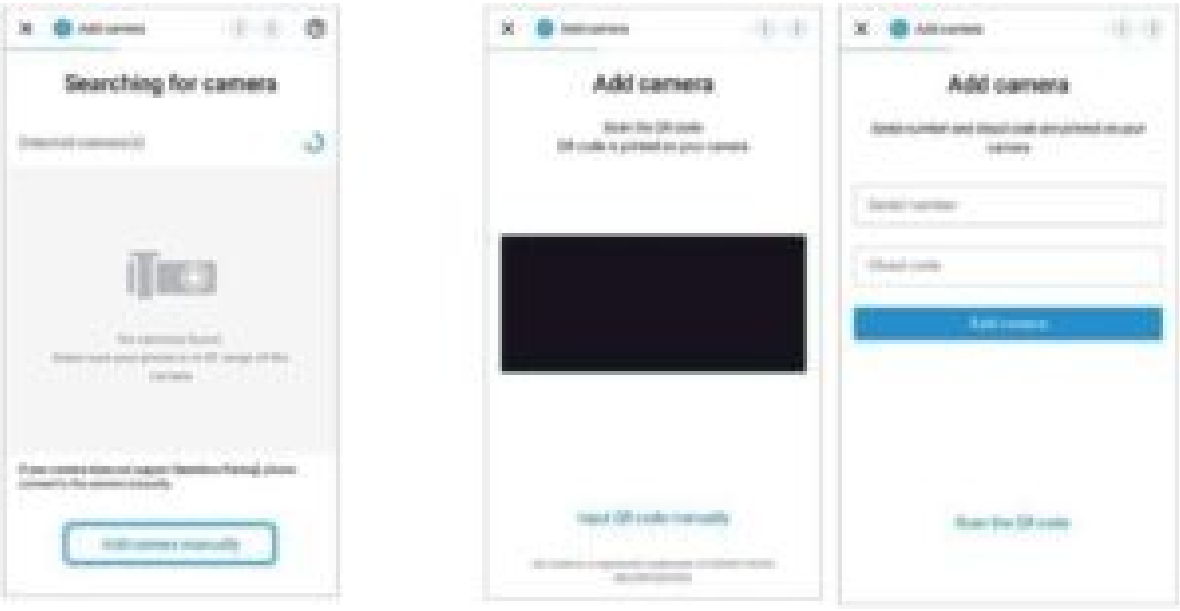

3. Connect your BlackVue dashcam to a Wi-Fi hotspot for Cloud connectivity

(iv) Select **Wi-Fi hotspot** and connect to your phone to the camera.

(v) Choose your Wi-Fi hotspot from the list Enter the password and tap **Save.**



Note

• Up to 3 Wi-Fi hotspot SSIDs can be saved (e.g. home, portable hotspot and work).

• To add or make changes to your cloud connection methods, go to **Connect to Cloud**, tap next to your dashcam model and select **Cloud connection settings**.

After set up the Wi-Fi hotspot setting, your dashcam will automatically connect to the Wi-Fi hotspot. If internet connection was not established, please ensure Wi-Fi login credentials were inserted correctly.

Select **Connect to Cloud** from the main screen to access all of the BlackVue features.

Note

- You can also change the dashcam settings through **Cloud** by tapping next to your camera name and select Camera settings.
- If LTE and Wi-Fi hotspot are available for internet connection, Wi-Fi hotspot will be in priority. If LTE connection is preferred at all times, please remove Wi-Fi hotspot information.
- For more information about using the BlackVue app, please refer to the manual by going to the main menu and selecting **Help** > **App manual**.

4. Connect your BlackVue dashcam to Cloud connectivity using CM100LTE

Make sure your BlackVue dashcam and connectivity module is connected. Then, follow the below steps for SIM registration.

(i) Locate the SIM card slot. Unscrew the bolt that locks the SIM slot cover. Then, unmount the SIM slot by using a SIM eject tool.

Insert SIM in the SIM slot. Mount the SIM slot back in the connectivity module, then, screw the bolt to hold SIM slot cover.

(ii) Select **3rd party SIM card** in the Choose the Cloud connection method page.

(iii) In order to set APN automatically, click icon to get the network carrier list. If you select your network carrier, APN setting information will auto-fill in the SIM card activation page.

(iv) If there is no network carrier that you want to use in the network carrier page, please select “**Other network carrier**”. You can manually set APN by filling in the APN information.

(v) Configure the APN settings to activate the SIM card and press **Done**.



For detailed information, please check "SIM activation guide" in the packaging box or visit BlackVue Help Center: **https://helpcenter.blackvue.com -> SIM Activation Guide (LTE series).**

Once your dashcam is connected to LTE network, you can go to the **Connect to Cloud** menu to use the Cloud features.

Note

- For full details, refer to the "SIM Activation Guide" that is included in the CM100LTE package.
- To use the BlackVue Cloud Service, SIM card must be properly activated for Internet access via LTE network.
- When the dashcam is connected to internet, you can use BlackVue Cloud features such as remote Live View and Video playback, Real-time location, push notification, Auto-upload, remote Firmware update etc. on BlackVue app and BlackVue Viewer.
- Some Cloud features may not work when surrounding temperature is high or/and LTE speed is slow.
- For more information about using the BlackVue app, please refer to the manual from **www.blackvue.com > Support > Manuals.**